CURVED GLASS
REFRIGERATED DELI CASE

OPTIONAL ACCESSORIES:

*Special Base Finish
*Additional Mezzanine Shelf
*Cord & Plug (Self-Contained Models Only)
*Remote Refrigeration
*Reflective Ends
*White or Mirrored Interior Ends With Laminated Exterior
*Reflective Rear Doors
*Casters/Cord & Plug Included (Self-Contained Models Only)
*Legs
*Top Cutting Board, White
*Package Shelf
*Light Below Package Shelf
*Front Glass and Rear Door Locks
*Joining Kit for Continuous Line-ups
*Scale Platform
*Step Riser or Pan Holder

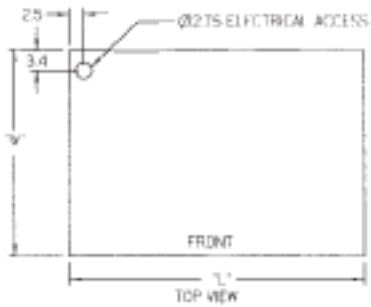

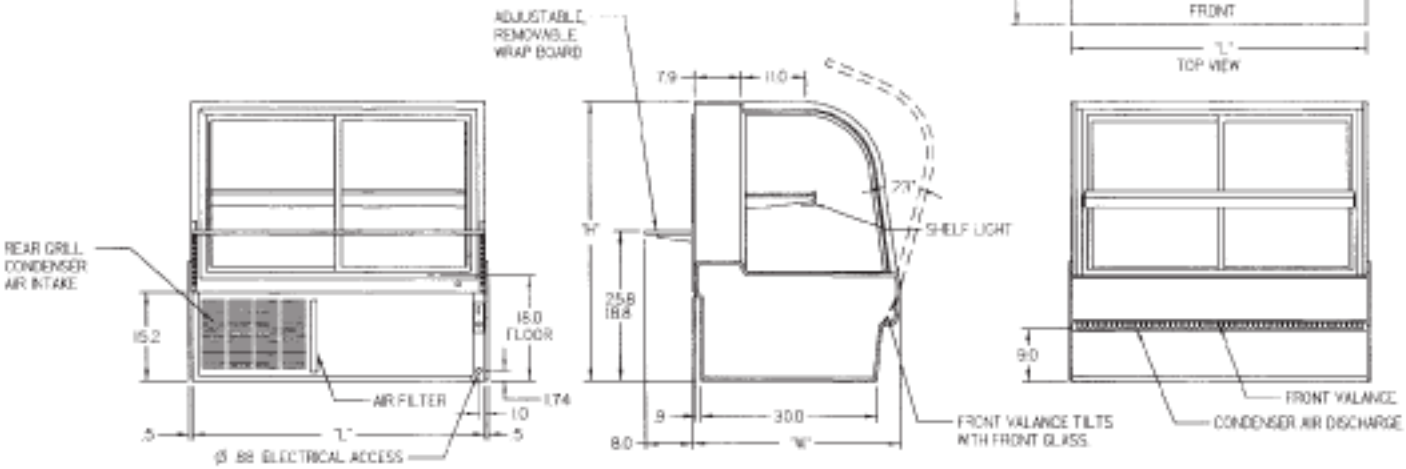

SPECIFICATIONS:

Model	Dimensions L W H	Shipping Weight (lbs)	Capacity (Step Risers)	Self-Contained 120/60/1	Remote 120/60/1
CGR5048CD	50.13" x 35.31" x 48"	620	3	1/2 HP - 10.5 AMPS	2.3 AMPS
CGR5948CD	59.13" x 35.31" x 48"	650	4	1/2 HP - 11.6 AMPS	2.5 AMPS
CGR7748CD	77.13" x 35.31" x 48"	870	6	3/4 HP - 14.2 AMPS	3.3 AMPS

- Refrigerated cases are designed to operate in a maximum environment of 75° ambient and 55% relative humidity.
- Due to continuing engineering improvements, specifications are subject to change without notice.

FEDERAL
a Standex company